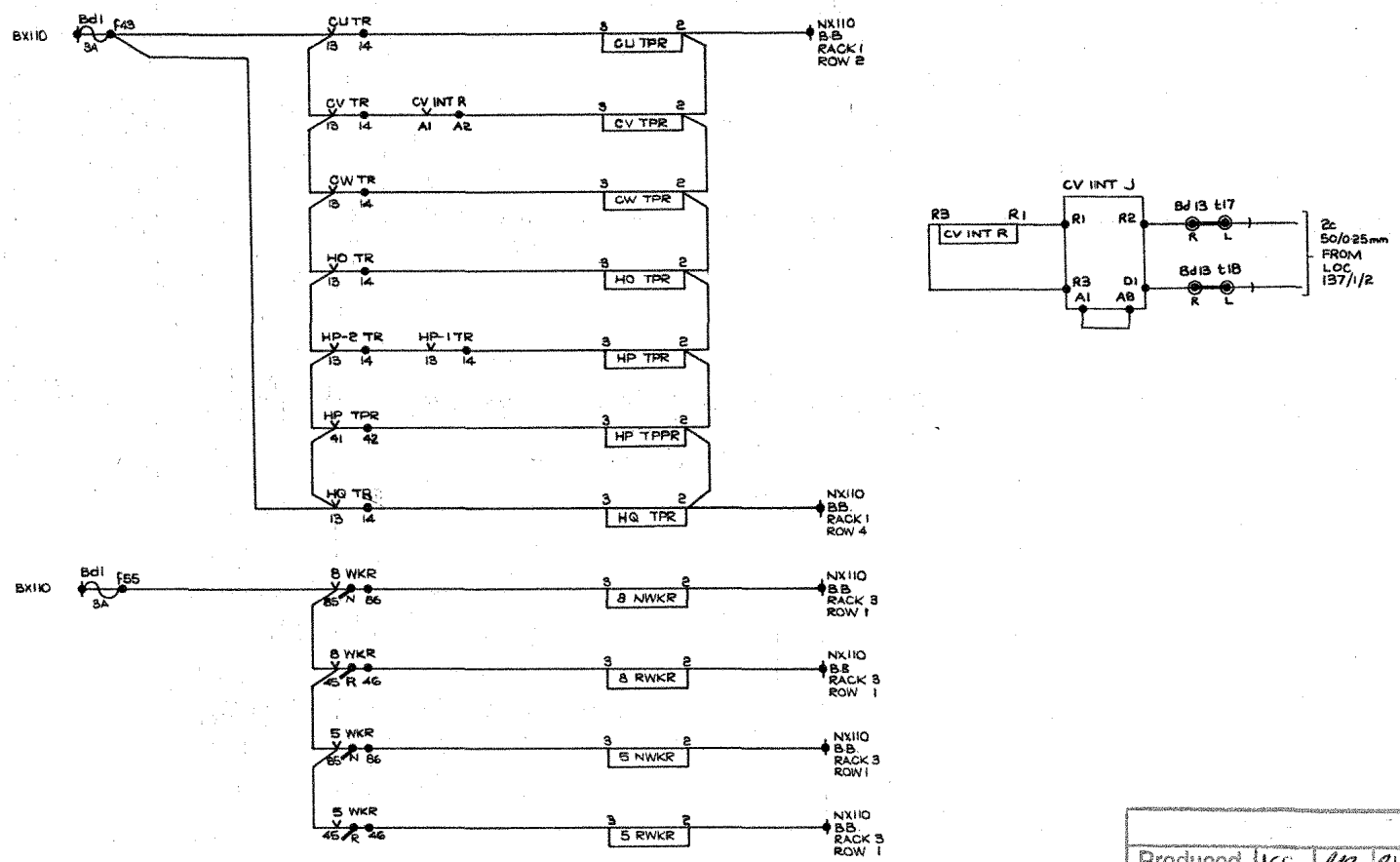

Produced	ICE		21-11-07
Checked			23/11/07
Issued			

Version BH1

DRAWN BY			
TRACED BY (ML) JEH			
CHECKED BY			
Site info: 10-06-91			

Source document updated

Version	Prod	Check
AC 2	TAS	MGN
AD 1	TAS	C&B
BH1	ICE	NS

Last Full Correlation: Date 02-02-07, Version BH1

GILLINGHAM

INTERNAL TPR'S & N/RWKR'S

BRITISH RLYS. (Southern Region)
SOUTHERN HOUSE, CROYDON.

Chief Signal & Telecommunications Engineer

DATE

No. 1926E-46

A2

ADMEI 56818